easyDisplays® by PAPERFLOW

NOTEASYDISP278NTAB

30/09/2010

1

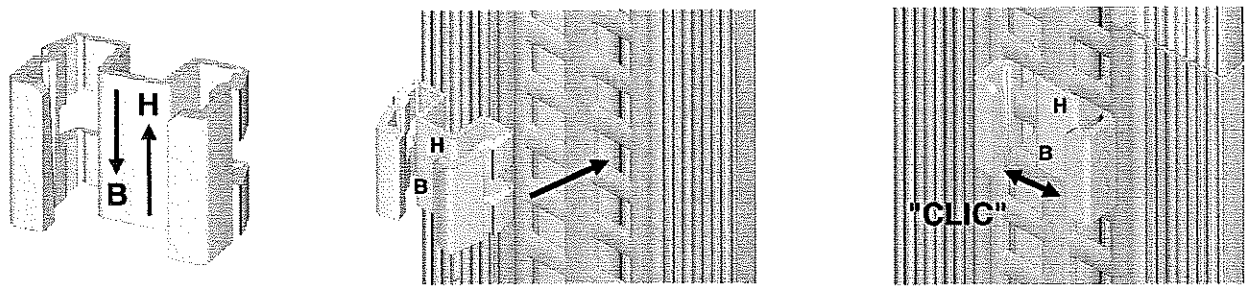

2

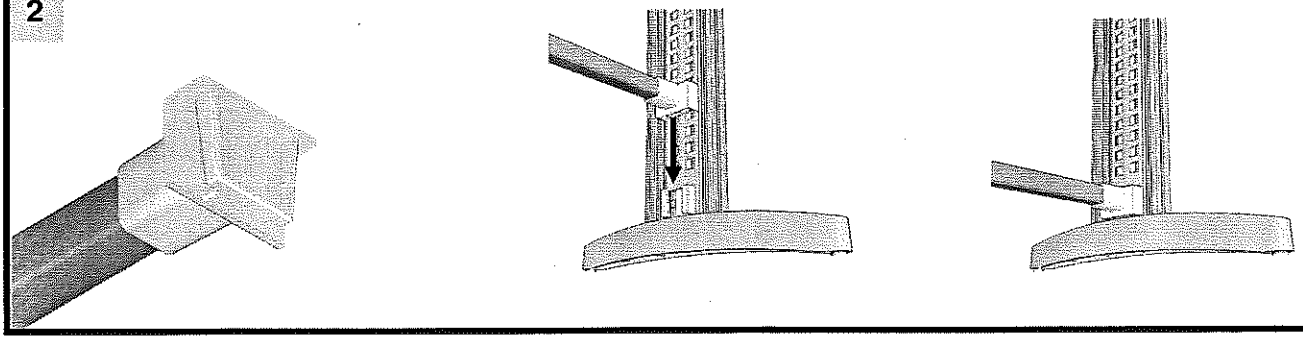

3

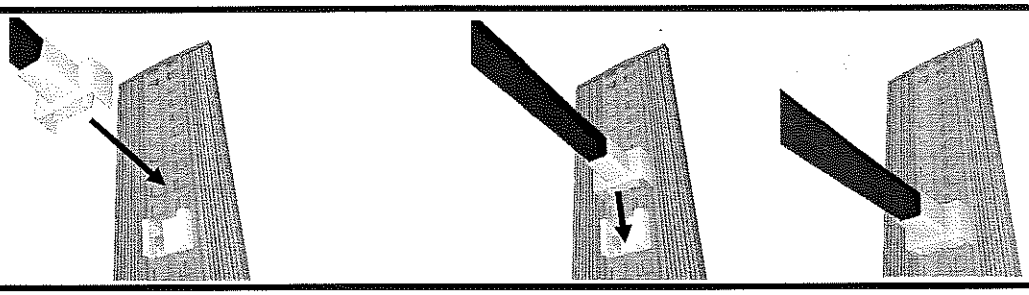

4

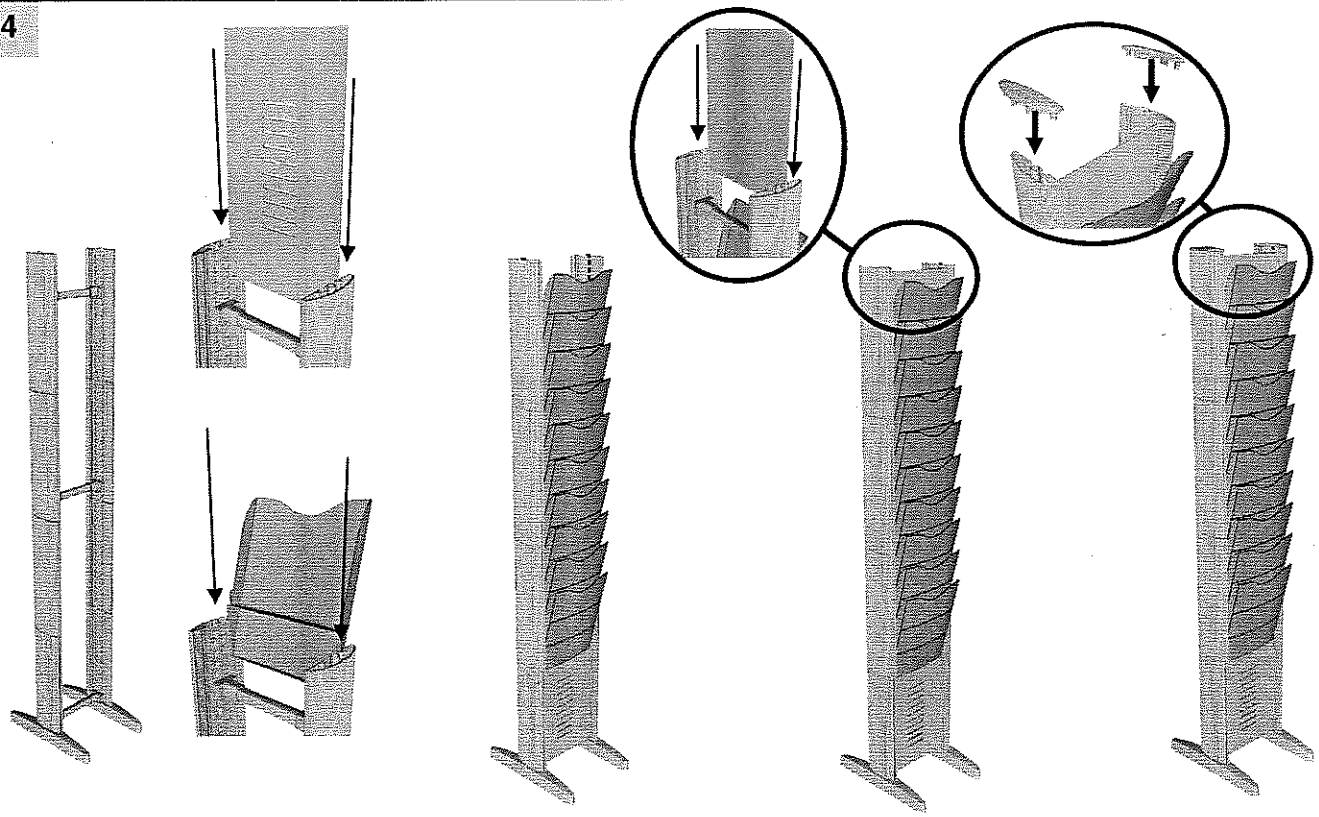

easyDisplays® by PAPERFLOW

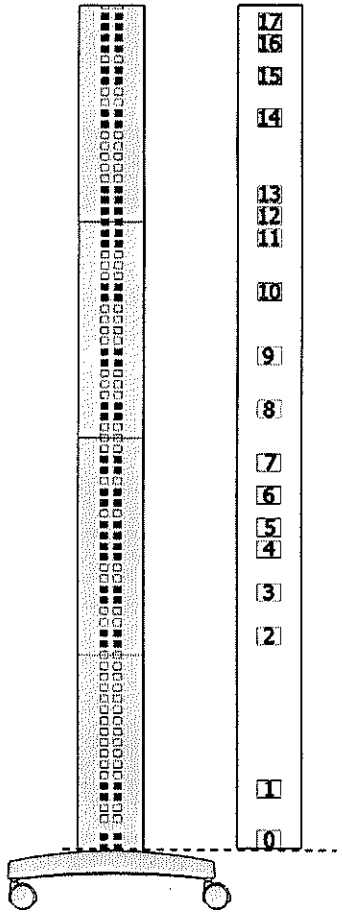

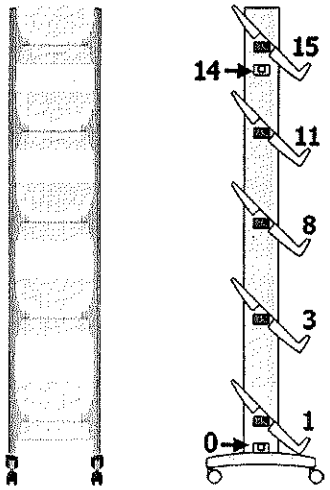

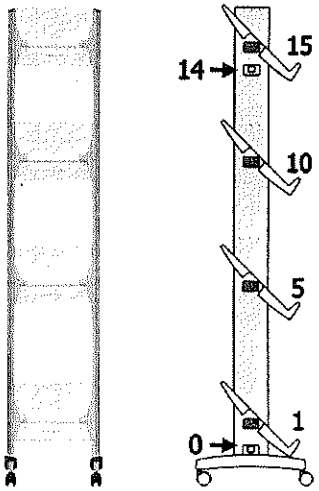

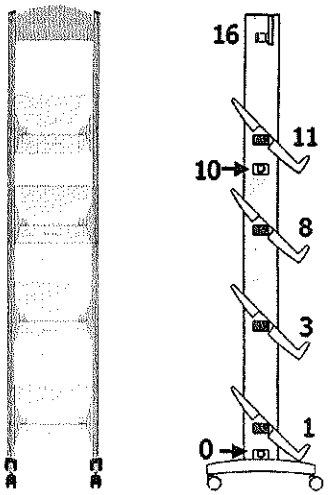

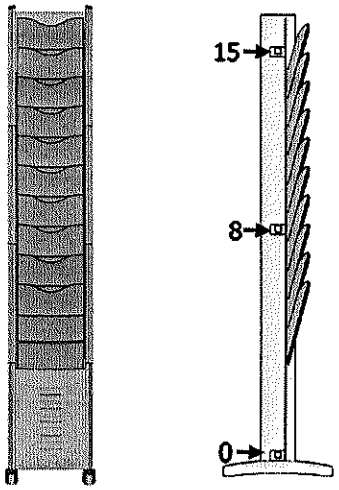

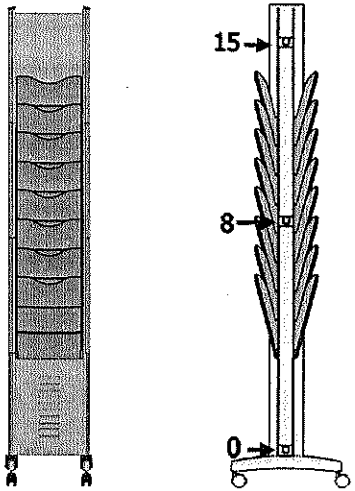

NOTEASYDISPLAYSPIEDS - TPS - 10/11/2010